LD792

ADJUSTABLE COMPACT INTERIOR/ EXTERIOR 2-TONE LED DOWNLIGHT

350 mA | 500 mA | 700 mA | IP65

The compact LD792 has an excellent size to output ratio with a deep recessed LED that is ideal for general downlighting and the highlighting of walls and columns within interior, exterior and marine applications (interior). Featuring as standard a matt black inner baffle for ultra-low glare, this along with the bezel can be painted in a wide range of colours offering endless styling options to suit your design scheme requirements.
The adjustable lens assembly can be tilted up to 30° to allow ultimate flexibility when focusing the product. Available LED engines include E3 and F1, offering colour temperatures of 2200K-5000K and a variety of beam angles, including a tight 12° narrow beam with medium options for more general downlighting. Though compact, the LD792 provides brilliant thermal and light output performance, with a single optic generating a superior beam shape and no multiple shadows.

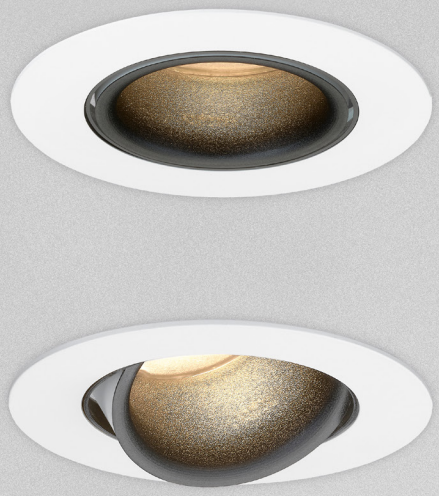

KEY FEATURES

- Very low glare with a deep recessed optic set back 26mm
- Black anti-glare ring (see diagram) to prevent glare when tilted
- Single optic for superior beam shape with no multiple shadows
- Matt black, low glare inner baffle is supplied as standard and can be painted in a colour of choice
- Compact powerful fitting delivering 414lm in 3000K
- Tight 12° narrow spot beam available
- Machined aluminium bezel available in a wide range of finishes; White (RAL 9016), Black (RAL 9005), Silver, Antique Bronze, Satin Antique Brass, Satin Brass, Anthracite Grey (RAL 7016) or any RAL paint finish
- 30° tilt adjustability for ultimate flexibility
- Versatile fitting rated IP65, ideal for interior and exterior projects including marine, hospitality and residential general downlighting, column and wall washing
- Features our E3 & F1 LED engines which is used across our uplight and surface mounted products enabling colour and beam consistency across a project
- E3 engine features reverse polarity protection
- F1 COB engine with super warm 2200K option and 90+ CRI
- Switched, 0-10V, Casambi, DMX, DALI, or Mains dimmable drivers available

DIMENSIONS

Dimensions in mm

For fitting dimensions please go to page 3.

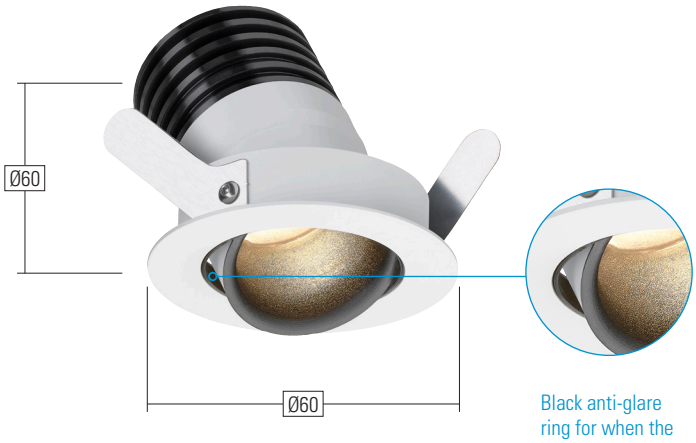

Black anti-glare ring for when the product is tilted.

LED ENGINE SPECIFICATION

Engine	E3		F1		
Beam angles	12°, 26°		21°, 28°		
LED manufacturer	NICHIA		CREE		
Colour temperature*	2200K, 2700K, 3000K, 4000K, 5000K		2200K, 2700K, 3000K, 4000K, 5000K		
Current	350mA	500mA	350mA	500mA	700mA
LED power (Max)	4.2W (5W**)	6W (7W**)	3.2W (3.5W**)	4.5W (5W**)	6.3W (7W**)
Delivered lumens (L_{100})	309	414	235	280	385
Lumens per circuit watt	62	59	81	73	67
CRI (Typ)	85		90		
Forward voltage (V_{100})	14V		9V		
Colour consistency	2 SDCM		3 SDCM		
Peak intensity	4233 cd		2076 cd		
LED lumens (at max output)	596		715		
LOR	0.69		0.54		
TM30	86	98	90.1	102.2	
UGR***	7.9		10.3		
LED lifetime	L90B5 at 90,000hrs		L80B5 at 80,000hrs		
Applications					

These values are based around a LD792-E3-500-LW30-NB & LD790-F1-700-LW30-MSB
*Lumen output data applies to all colour temperatures
**indicates the nominal power for the LED run at that particular current and includes losses associated with using an 85% efficient driver
*** UGR values based on room parameters of 4H 8H, C70 W50 F20

MECHANICAL

Ambient temperature	-20°C to 45°C (350mA) or -20°C to 35°C (500mA)
Glass	Low iron clear glass, 1mm thick
Materials	Aluminium bezel, black anodised aluminium body
Weight of product	0.14kg
IP rating	IP65
Wiring	In-series constant current wiring (pre-wired with cables at a length of 190mm)

ENVIRONMENTAL

TM65	Available on request
TM66	2.5

AVAILABLE FINISHES

Please refer to our finishes guide for full details

The LD792 bezel is machined from aluminium and painted in-house at LightGraphix. Wet spray paint finishes are suitable for interior, exterior and high saline marine environments. Our standard colours are below but we can accommodate any RAL request.

WHITE (RAL 9016)

BLACK (RAL 9005)

SILVER ANODISED

ANTIQUE BRONZE

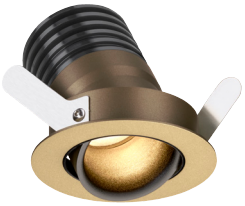

SATIN ANTIQUE BRASS

SATIN BRASS

ANTHRACITE GREY (RAL 7016)

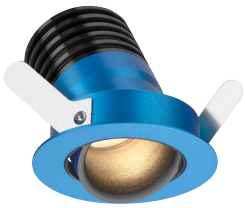

RAL

2-TONE PAINTING (BLACK BAFFLE FINISH OPTIONS)

As standard the inner baffle is supplied in a low glare matt black textured finish but can also be painted in a colour of choice to offer complete design scheme flexibility. When specifying your order codes and options, please indicate a bezel finish as well as inner baffle colour. A fixed version of this product, the LD782 is available.

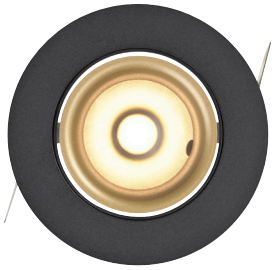

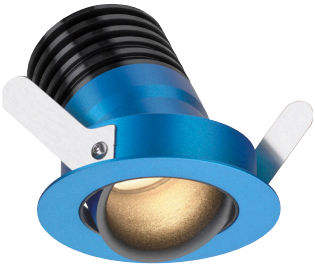

PAINT FINISH NOTE

The outer baffle finish matches the bezel finish which can be seen when the product is titled.

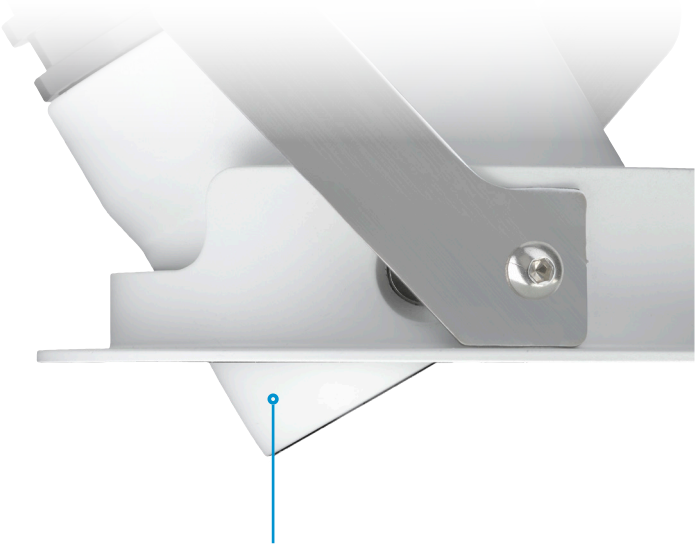

DIMENSIONS & FIXING OPTIONS

Dimensions in mm

2 x spring clips are supplied as standard and provide a simple single-fix mounting method. Suitable for use in surfaces with a thickness of 5mm – 25mm.

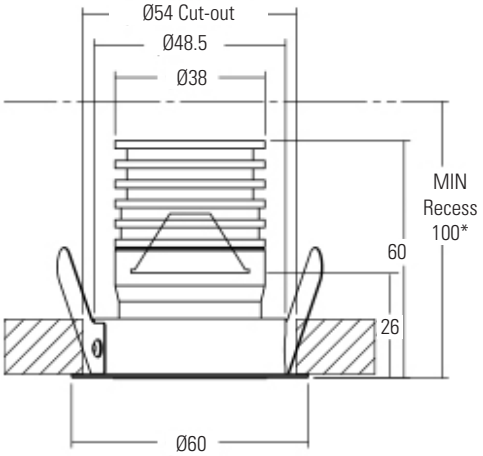

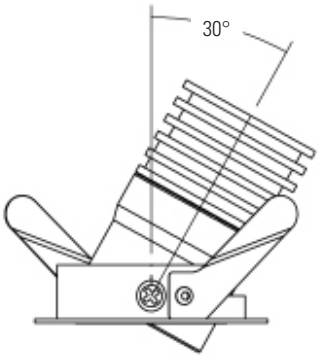

*see ceiling requirements table for more information

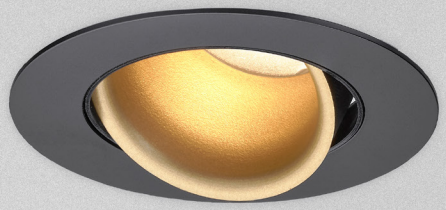

CONE DIAGRAMS

E3 LED Engine

Cone diagrams below are based on a 3000K E3 LED engine run at maximum output 500mA, 7W. Images below represents beam outputs when wall washing a 3m wall, spaced 125mm away from the lit surface. Photometric files (LDT) are included in the design pack which can be downloaded from the LD792 product page on the website.

Narrow Spot Beam
500mA using a 12° optic

Distance (m)	Cone Width (m)	Illuminance (lx)
0.5	0.13	16823
1.0	0.26	4206
1.5	0.39	1869
2.0	0.52	1051
2.5	0.65	673
3.0	0.78	467

Medium Beam
500mA using a 26° optic

Distance (m)	Cone Width (m)	Illuminance (lx)
0.5	0.24	5489
1.0	0.49	1372
1.5	0.73	610
2.0	0.98	343
2.5	1.22	220
3.0	1.46	152

F1 LED Engine

Cone diagrams below are based on a 3000K F1 LED engine run at maximum output 700mA, 7W. Images below represents beam outputs when wall washing a 3m wall, spaced 125mm away from the lit surface. Photometric files (LDT) are included in the design pack which can be downloaded from the LD792 product page on the website.

Medium Spot Beam
700mA using a 21° optic

Distance (m)	Cone Width (m)	Illuminance (lx)
0.5	0.20	8423
1.0	0.40	2106
1.5	0.60	936
2.0	0.80	526
2.5	1.00	337
3.0	1.20	234

Medium Beam
700mA using a 28° optic

Distance (m)	Cone Width (m)	Illuminance (lx)
0.5	0.25	5504
1.0	0.51	1376
1.5	0.76	612
2.0	1.02	344
2.5	1.27	220
3.0	1.53	153

CEILING VOID REQUIREMENTS

Installation requirements can vary but the minimum installation volume requirements must be adhered to. The volume of air within the void ensures that the thermal performance of the product is not compromised and that proper cooling of the LED can take place. The minimum void height is 100mm.

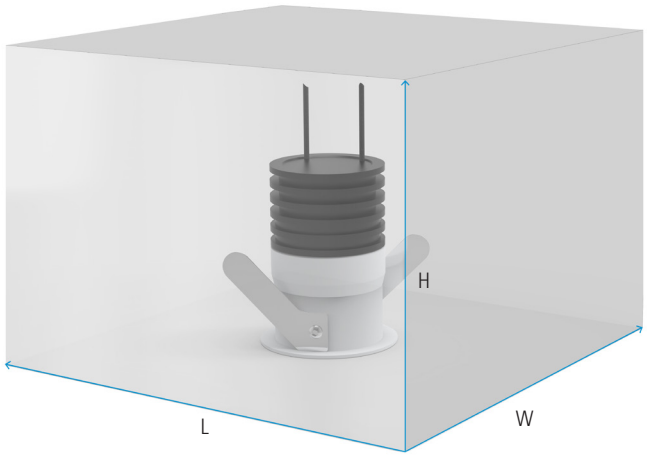

E3 LED			
Output current	Minimum void dimension requirements (Lmm x Wmm x Hmm)	Minimum void volume	
		cm^3	Litre(s)
LD792-E3-350	200 x 200 x 70	2800cm^3	2.8
LD792-E3-500	200 x 200 x 100	4000cm^3	4

F1 LED			
Output current	Minimum void dimension requirements (Lmm x Wmm x Hmm)	Minimum void volume	
		cm^3	Litre(s)
LD792-F1-350	200 X 200 X 70	2800cm^3	2.8
LD792-F1-500			
LD792-F1-700	200 X 200 X 100	4000cm^3	4

ORDER CODES & OPTIONS

Example: LD792-E3-500 / LW30 / NB / WHITE / BLACK

Light Engine & Drive Current		LED Colour		Beam Angle		Bezel Finish		Inner Baffle Finish
LD792 -	/		/		/		/	

E3

5W LED at 350mA	LD792-E3-350
7W LED at 500mA	LD792-E3-500

Super Warm White (2200K)	/LW22
Extra Warm White (2700K)	/LW27
Warm White (3000K)	/LW30
White (4000K) on request	/LW40
Cool White (5000K)	/LW50

12° Narrow spot	/NB
26° Medium	/MB

F1

3.5W LED at 350mA	LD792-F1-350
5W LED at 500mA	LD792-F1-500
7W LED at 700mA	LD792-F1-700

Super Warm White (2200K)	/LW22
Extra Warm White (2700K)	/LW27
Warm White (3000K)	/LW30
White (4000K) on request	/LW40
Cool White (5000K)	/LW50

21° Medium spot	/MSB
28° Medium	/MB

Paint Finish White (RAL 9016)

Paint Finish Black (RAL 9005)

Paint Finish Silver Anodised

Paint Finish Antique Bronze

Satin Antique Brass

Paint Finish Satin Brass

Paint Finish Anthracite Grey (RAL 7016)

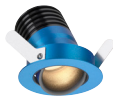

Paint Finish RAL

Matt Black (Standard)

White (RAL 9016)

Silver Anodised

Antique Bronze

Satin Antique Brass

Satin Brass

Anthracite Grey (RAL 7016)

RAL

Drivers
Use with 350mA, 500mA & 700mA constant current LED drivers We have a wide range of LED drivers available. Please see the downloads section of our website.